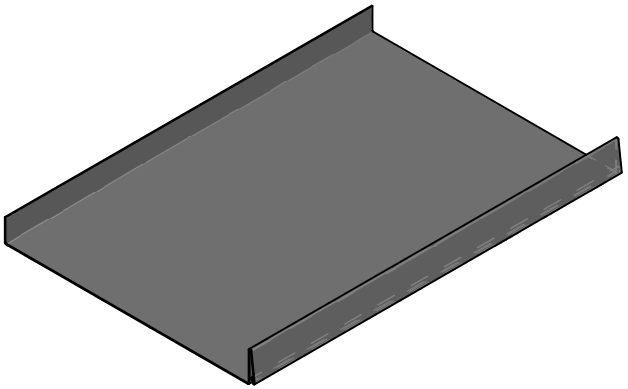

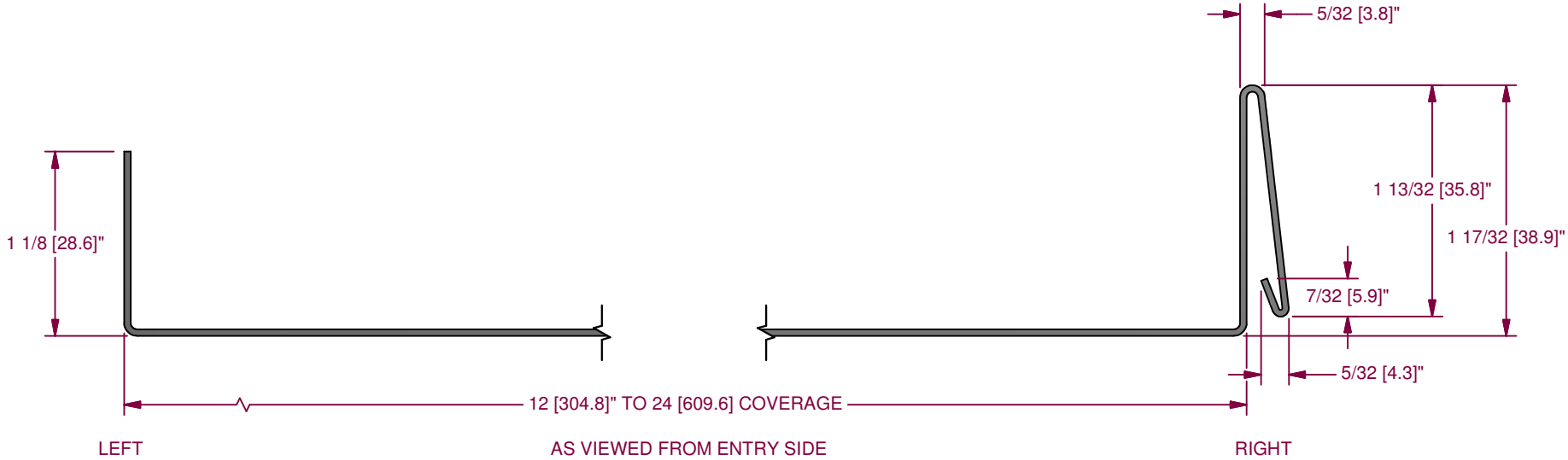

NOTE:
1. MATERIAL USAGE: 4 1/8" [104.8]
2. DUAL DIMENSIONS: Inch [mm]

MATERIAL	FINISH
PAINTED STEEL/PAINTED ALUMINUM/COPPER	NONE

REVISION HISTORY

REV	ECR NO.	DATE	RELEASED BY
1	Updated	11/08/07	JD
2	ADDED mm	05/02/2012	JD

TOLERANCES
.XX = ± .01
.XXX = ± .005
FRACTION = ± 1/32"
ANGLE = ± 1/2°

NEW TECH MACHINERY CORP.

DRAWN BY	PART NAME		
JD	SS450 PANEL PROFILE		
DATE 11/08/07			
CHECK BY RS	PART NUMBER	SHEET	REVISION
DATE 11/08/07	SS4-450P	1 OF 1	2